FEMALE END VIEW (J1)	MALE END VIEW (P1)	TYPICAL PANEL CUTOUT
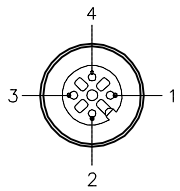	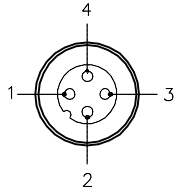	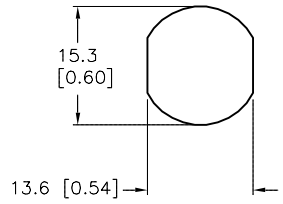
1 = BROWN 2 = WHITE 3 = BLUE 4 = BLACK	1 = BROWN 2 = WHITE 3 = BLUE 4 = BLACK	

SPECIFICATIONS

CONTACT CARRIER MATERIAL	NYLON OR TPU
MOLDED HEAD MATERIAL/COLOR (J1)	TPU/YELLOW
CONTACT MATERIAL/PLATING	BRASS/GOLD
COUPLING NUT MATERIAL/PLATING (J1)	BRASS/NICKEL
HOUSING, LOCKNUT MATERIAL/FINISH (P1)	STAINLESS STEEL/ PASSIVATED
RATED CURRENT [A]	4.0 A
RATED VOLTAGE [V]	250 V
OUTER JACKET MATERIAL/COLOR	PVC/GRAY
CONDUCTOR INSULATION MATERIAL	PVC
NUMBER OF CONDUCTORS [AWG]	4x22 AWG
TEMPERATURE RANGE	−40°C to +105°C (−40°F to +221°F)
PROTECTION CLASS	MEETS NEMA 1,3,4,6P AND IEC IP68
MAX. PANEL THICKNESS	3.0 [0.12]

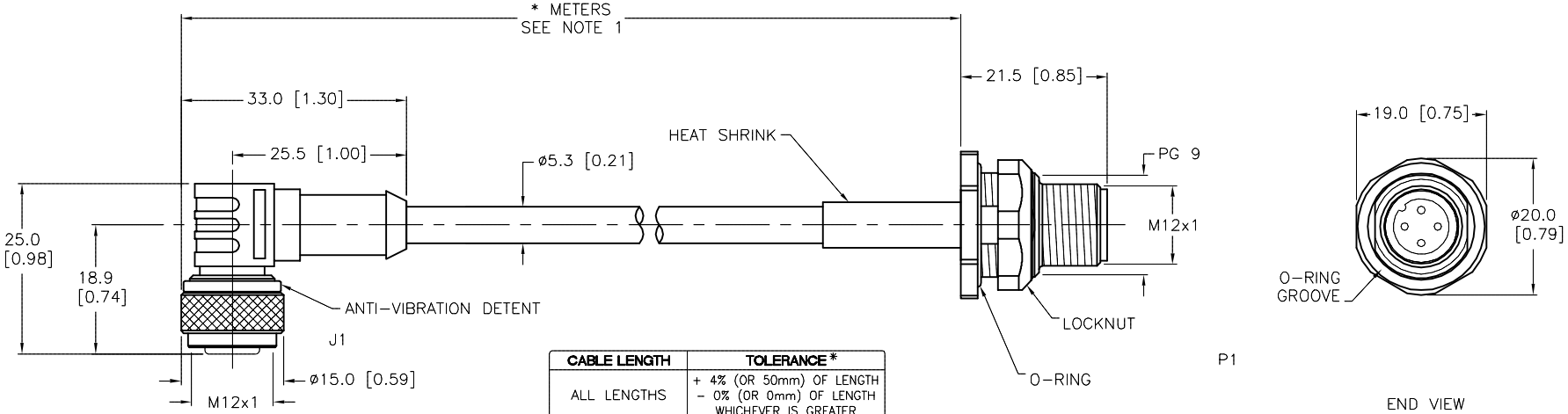

END VIEW
LOCKNUT NOT SHOWN

CABLE LENGTH	TOLERANCE *
ALL LENGTHS	+ 4% (OR 50mm) OF LENGTH − 0% (OR 0mm) OF LENGTH WHICHEVER IS GREATER
STRIP LENGTH	**TOLERANCE ***
0−7mm	±0.5mm
8−29mm	±1.0mm
30−49mm	±2.0mm
50−69mm	±3.0mm
70−100mm	±4.0mm
OVER 100mm	±5.0mm
* UNLESS OTHERWISE SPECIFIED	

KEYWAY ROTATED 180°
FROM STANDARD
(SEE NOTE 2)

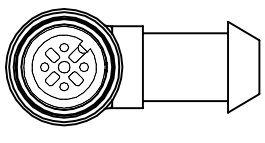

SOURCE DRAWING - FOR REFERENCE ONLY

NOTES:

1. "*" INDICATES CABLE LENGTH IN METERS. CONTACT TURCK TO ORDER SPECIFIC LENGTHS.

2. "/C1118" DESIGNATES EUROFAST RIGHT ANGLE KEYWAY ROTATED 180 DEGREES FROM STANDARD.

REV	DESCRIPTION	BY	DATE	ECO NO.
B	UPDATE DIMENSIONS IN END VIEW	RDS	02/10/15	48925

RELATED DOCUMENTS
1.
2.
3.
4.

MATERIAL

FINISH

3RD ANGLE PROJECTION

ALL DIMENSIONS DISPLAYED ON THIS DRAWING ARE FOR REFERENCE ONLY

CONTACT TURCK FOR MORE INFORMATION

THIS DRAWING IS CONFIDENTIAL AND THE PROPERTY OF TURCK INC. USE OF THIS DOCUMENT WITHOUT WRITTEN PERMISSION IS PROHIBITED.

DRFT RDS | DATE 07/16/12
APVD T.S. | SCALE NONE

UNIT OF MEASUREMENT
MILLIMETER [INCH]
DO NOT SCALE THIS DRAWING

TURCK INC
High Technology Sensors and Automation Controls
3000 CAMPUS DRIVE
MINNEAPOLIS, MN 55441
1-800-544-7769
(763) 553-7300
(763) 553-0708 fax
turck.com

DESCRIPTION
WK 4.4T−*−FSFDV 4.4/C1118

IDENTIFICATION NO.

REV B

FILE: 777029465

SHEET 1 OF 1